Mini Fire Truck
Operation Manual

⚠ WARING

Be sure to read this operation manual before use.

Universal Space Amusement Equipment Ltd.,

The Company

Universal Space (UNIS) is a leading manufacturer of amusement machine. Our business first started as a small company in 1993. The last decade of hard work, innovation, and technology excellence have allowed our company to evolve from a small-scale factory to a corporate organization, branching out into four distinct departments: Manufacturing, Design, Sales, and Operation. We specialize in manufacturing redemption games, kiddy rides, prize machines, indoor/outdoor rides, and selective arcade games.

Thank you for your purchase. We hope you enjoy the product.

Safety Instructions:

To ensure the safe usage of the product, be sure to read the following before using the product. The following instructions are intended for the users, operators and the personnel in charge of the operation of the product. After carefully reading and sufficiently understanding the warning display and cautions, handle the product appropriately. Be sure to keep this operation manual nearby the product or elsewhere convenient for referring to it when necessary.

Depending on the potentially hazardous degrees, the terms of NOTICE, WARNING GAUTION, etc. are used. Be sure to understand the content of the displays before reading the text.

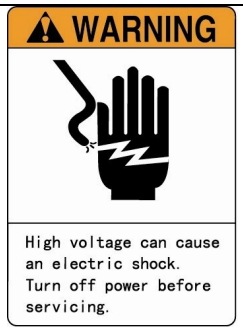

High Voltage Warning:

High voltage can cause an electric shock.

Turn off power before servicing.

No Touching Warning:

This part may cause an electric shock or the surface is overheating. Do not touch this part.

High Temperature Warning:

This part may caused by scalding if somebody inadvertent to do something.

⚠ WARNING

Non-technical personnel who do not have technical knowledge and Expertise should refrain from performing such work that this manual requires the location's maintenance man or a serviceman to carry out, or work which is no explained in this manual .failing to carry out, or work which is not explained in this manual. Failing to comply with this instruction can causes a severe accident such as electric shock.

Contents

1、 Specification……..…….…… 4

2、 Package contents……..……..…… 5

3、 Location、Installation and Moving…….…… 6

4、 Connecting the power cord……..…….…… 8

5、 Game play……..…… 9

6、 Game maintenance……..…….…….10

7、 IO Setting……..……..……11

8、 Game adjustment……..…….……12

9、 Overall structure……..……..……18

10、 I/O Chart

11、 Wirning diagram

1. Specification

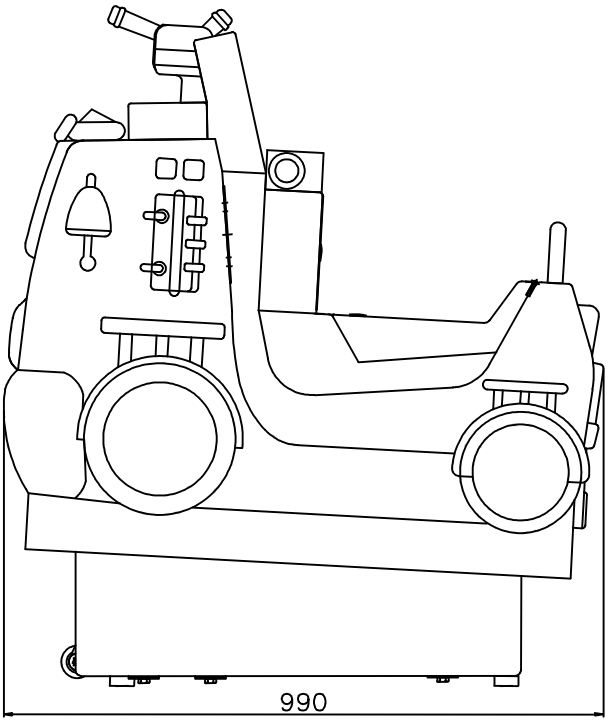

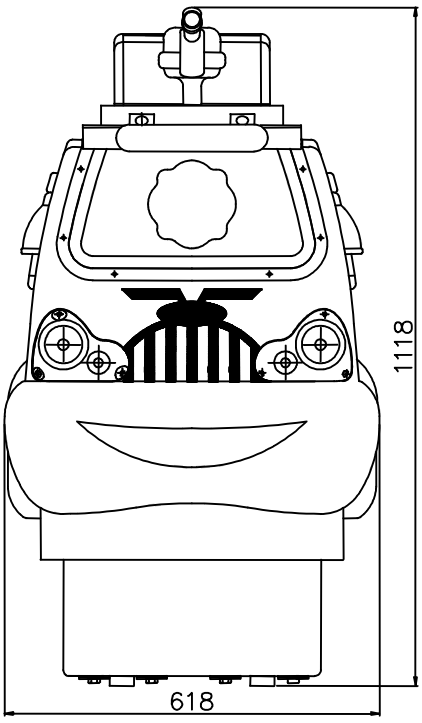

Rated power supply：AC110V 50/60Hz

（1）Power consumption：Min power consumption：25W

Max power consumption：350W

（2）Dimensions：W618×D990×H1118(mm)

（3）Weight：About 100Kg

（4）Environment condition：（Indoor）temperature：-10℃~+40℃

Humidity：≤90%

※Note: Game parameters are subject change without notice。

2. Package contents

Be sure to check that you have received all package indicated below：

（1） Body Assembly：1 unit

（2） Accessories

No.	Name	Spec.	Qty	Illustration	Note
1	Fuse	T10A/250 ϕ 6-300	1		Choose by area
2	Manual	English	1		Choose by area
3	Key	171	2		
4	Key	2222	2		
Tot			6		

3. Location、Installation and Moving

⚠ WARNING

- **For indoor use only.**

3.1 Play Zone

This machine requires space for playing the game and for maintenance as shown below. Be sure to leave enough space when installing the machine.

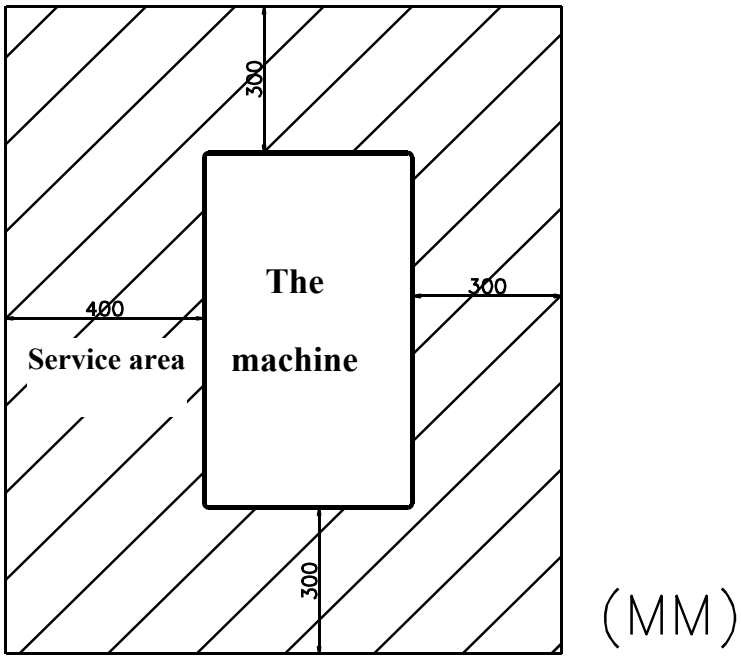

3.2 Locations to avoid installing

⚠ WARNING

This machine is designed for indoor use only. Never install this machine outdoors or any of the flowing;

- Places where dew may develop due to temperature differences
- Locations close to hazardous article
- Locations close to a heating instrument
- Close to instruments that can easily catch fire
- Unstable or vibrating places
- Damp or dust places

3.4 Transport

Install this machine on a flat surface. When moving in a short distance, as shown in the picture, lift up the end of the machine and let the front two castors touch the ground, and hold the handle to move the machine.

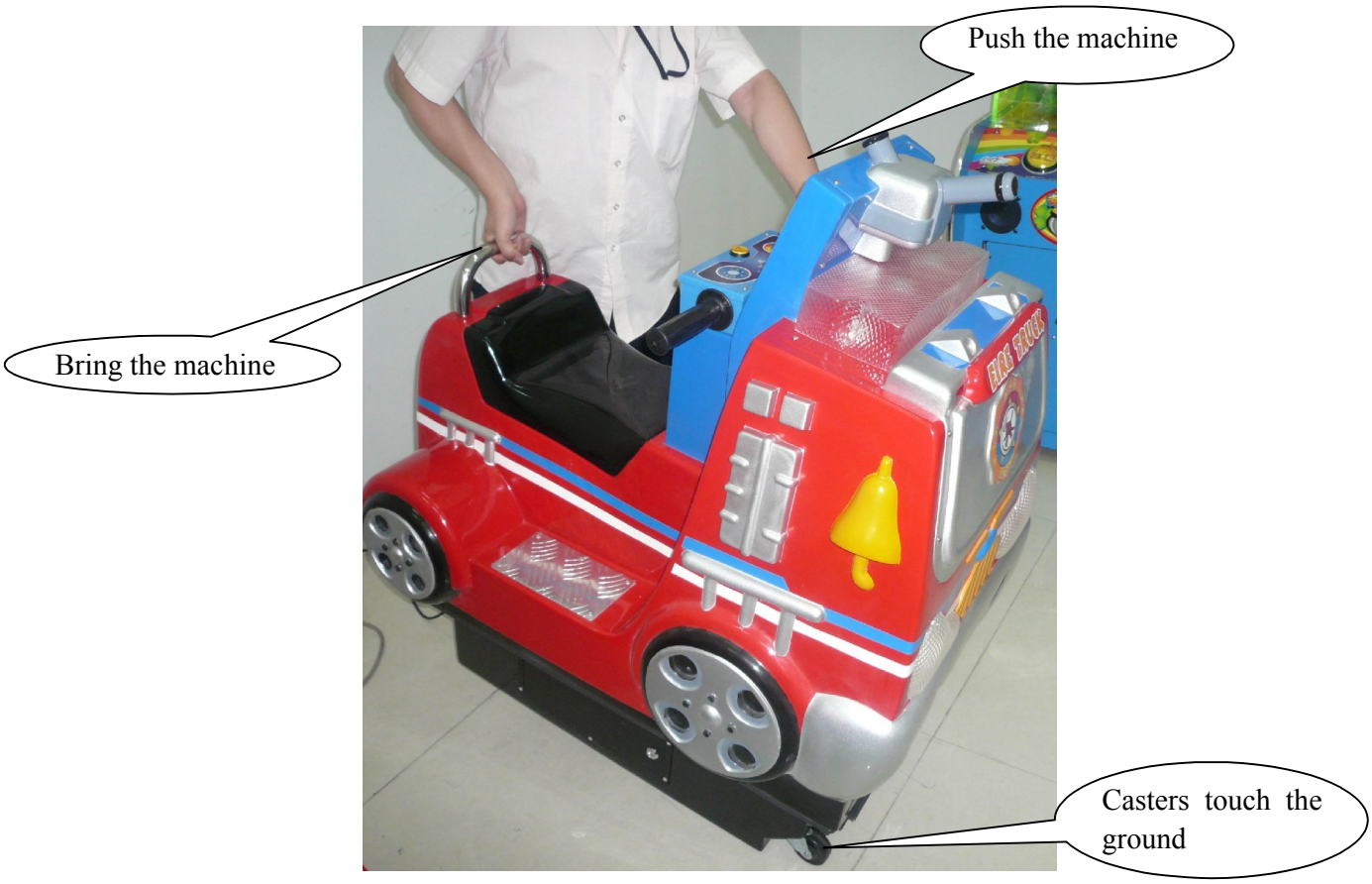

WARNING

- Be careful not to damage the machine during transport.
- Do not give a shock to the molded parts. These parts are fragile.
- Be careful not to give a shock to the machine when bringing it down from a higher level.
- Unplug game before moving.
- Do not lay game on side during transport.

4. Connecting the power cord

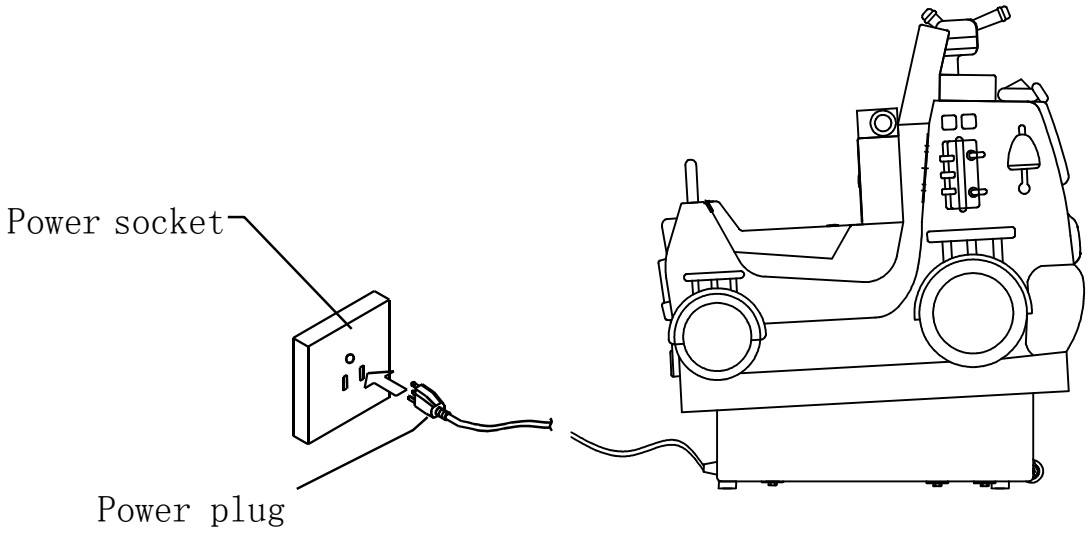

➢ **NOTICE**: The machine supply voltage is 110V, please refer the label of the machine and connect the actual supply voltage. If not, it can cause an electric shock .

⚠ WARNING

- Do not put any heavy things on the cord, or it will attaint the power cord the case a fire and electric shock or leakage.

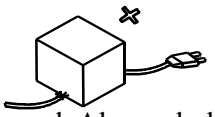

- To pull out the power plug, do not pull the cord. Always hold the power plug to pull it out.
- Do not touch the power plug with a wet hand to avoid electric shock.

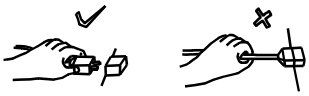

- Do not draw and twist the cord. Do not place the cord near a heating device.
- Do not place the cord where the player easy to touch or kick it.
-

- Run this machine with a right supply voltage and fuse.

5. Game play:

1.Move the fire truck by turning the handles. spray water by pressing the SPRAY button.

2.Game starts. Drive the truck to the fire place and press spray button to put out a fire.

3. Time is out and the game is over. Put more credit for another ride.

6. Game maintenance:

Check the following items before operating the game.

①Try to run the game before operation every day.

②Check every component after running the game for a month；

③Check the machine regularity.

⚠ WARING:

1) Remove power before servicing game。

To avoid short circuit, the power must be removed before touching inside. If you have to switch on the power, please refer the operation manual.

2) Choose the appropriate replacement parts.

Using the wrong part will lead to short circuit or break down the main board.

3) Do not unbending remove, install or change equipment.

It will lead to short circuit and machine malfunction even can bring a fire.

4) Do not put vases with water, cups or containers on the machine. Also chemical or heavy items are not allowed.

The spill will cause short circuit, and people will be injured by the falling items which also can destroy the machine.

5) Do not place any items in front of the air outlet of the machine.

Or it will cause the temperature higher inside and affect the game even break down the machine.

6) Do not unbending maintain the machine.

Because it can cause short circuit and lose control of the machine and any other faults.

7. IO Setting：

7.1 To adjust DIP, please refer the I/O chart.

Input：

Input		Content	Input		Content
JP3	12V	+12V			
	GND	GND			
	GND	GND			
	+5V	+5V			

Output：

Output		Content	Output		Content
J1	GND	GND	J3	GND	
	12V	12V		0T9	
	0T1	Main motor		+5V	
	0T2	Button lamp		0T10	
	0T3	Coin counter		0T11	
	0T4	Alarm lamp		GND	
	0T5	Headlight_L+ strip lamp 1	J4	CTL	
	0T6	Headlight_R+ strip lamp 2		12V	
	0T7	Alarm light blue		GND	
	0T8	Taillight（3 pcs）		SIG	
J2	GND		J5	U1	L-Vol POT 1
	0T9			C1	L-Vol POT 2
	+5V			G	L-Vol POT 3
	0T10			U2	R-Vol POT 1
	0T11			C2	R-Vol POT 2
	GND			G	R-Vol POT 3

NOTE

The above are subject change without notice.

8. Game adjustment：

8.1 Operation：

Press the Reset and Service button（or turn left & turn right of the handle）to select the options. Enter one page, if you want to adjust one item, please wait until this item is high lighted. Then press the (SPRAY button). And then press the Reset and Service button to adjust. Press Reset button is to decrease and press Service button is to increase. Press Spray button to exit after finish adjustment. Press Reset and Service button switch to SAVE（CANCEL）. Press SPRAY button to save or not..

8.2 IO input setting:

If the IO input of the AMAZON board corrupt, please connect it to the free port. If the attack input is corrupt in the setting option, please hold on any of the button for 5 seconds. Count down will display and attack action is play after 10 seconds.

8.3 Press the setting button to the setting Menu.

Manual setting：

1. Game setting

2. Business report

3. Input config

4. Output config

5. Close

✧ Game setting：

Options：

1. TIME：Game time setting

2. COIN：Coin per round.

3. FREE PLAY：The default Setting is OFF. If set to ON, press the ATTACK button can put a t credit.

4. SOUND VOL：Set the volume of the game. Such as hitting, effect etc.

5. MUSIC VOL：Set the background music of the game.

6. SCORE TO TICKET： Set how many score(s) can get one ticket

7. During demo:

8. Mute: Yes is no sound ,NO is sound 9:Turn off lights:

10. SAVE：Save the settings. 11. CANCEL：Exit without saving.

✧ Business report：

Options：

1. Insert Coin：Show the inserted coins amount.

2. Service Coin：Show the credit amount by coin SW.

3. Out Ticket：Show tickets payout

4. Game：Show game times

5. CANCEL：Cancel and back

✧ Input config

Options：

1. Config：setting the button config（Input config）
2. InCoin：coins button config（Input config）
3. TicketMachFixed：ticket reset button config（Input config）
4. Left：The direction of the left button config（Input config）
5. Right：The direction of the right button config（Input config）
6. Up：The direction of upper button config（Input config）
7. Down：The direction of down button config（Input config）
8. Attack：ATTACK (confirm) button config（Input config）

9. SAVE：Save the settings and return。

10. CANCEL：Cancel and back to menu

✧ Output Config：

Options：

1. TicketMeter：Ticket meter output interface (Disable)
2. Light1：Light 1 output interface
3. Light2：Light 2 output interface
4. Light3：Light 3 output interface
5. Light4：Light 4 output interface
6. TicketMach：Ticket dispenser output interface (nonuse)
7. MainMotor： Main motor output
8. AttackBtn： Attack button lamp output
9. CoinCount：Coins counter output
10. AlarmLight： Alarm light output
11. SAVE：Save setting and back to menu
12. CANCEL：exit without saving and back to menu

9. Overall structure

9.1 The main Assy.

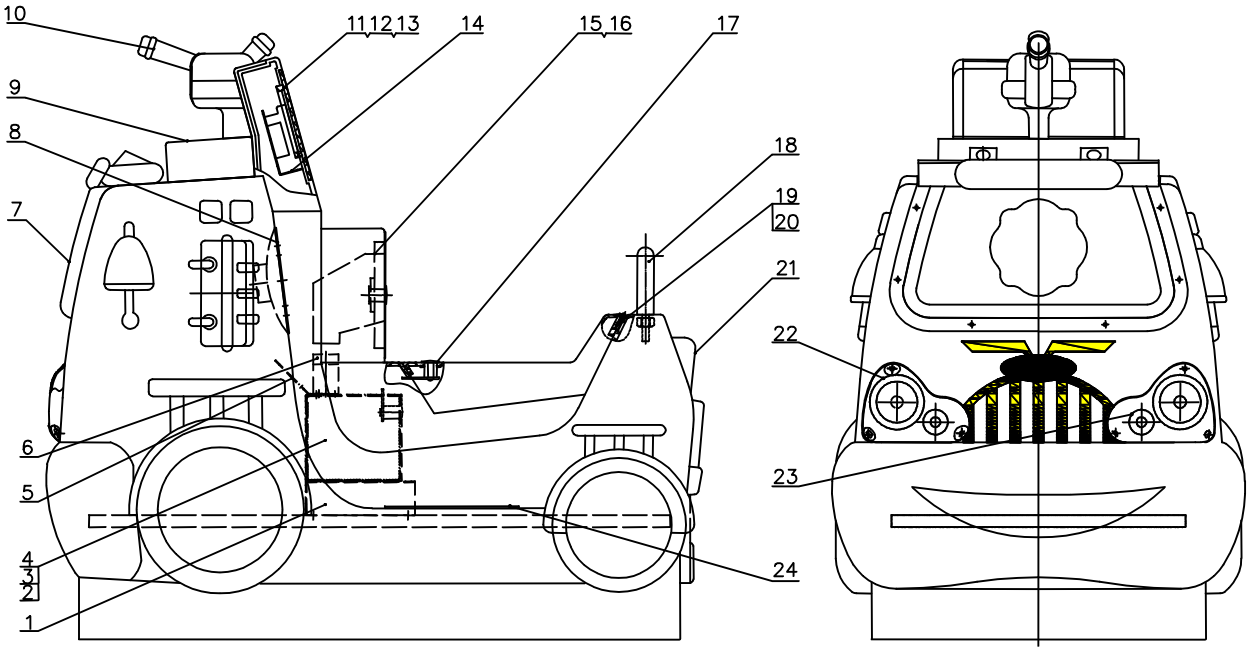

No.	Part No.	Drawing No.	Name	Qty	Spec.	Note
1	M105-101-000	MNJCC-01-08	Coin box crust	1	Electrolytic sheet	
2	M105-102-000	MNJCC-01-07	Coin box	1	Electrolytic sheet	
3	M105-601-000	MNJCC-01-21	Coin box damping board	1	Black EVA	
4	M105-401-000		Lock	1	2222	
5	M105-103-000	MNJCC-01-20	Test button board	1	Electrolytic sheet	
6	M105-104-000	MNJCC-01-09	Coin pipe	1	Electrolytic sheet	
7	M105-602-000	MNXFC-01-02	Front FRP	1	FRP	
8	M105-105-000	MNJCC-01-05	Speaker net	2		
9	M105-603-000	MNXFC-01-05	Alarm light plastic	1	PMMA（acrylic）	
10	M105-604-000	MNXFC-01-04	Squirt gun	1	FRP	
11	M105-605-000	MNJCC-01-06	LCD 面板	1	透明有机片	
12	M105-606-000	MNJCC-01-22	LCD long side	2	Black EVA	
13	M105-607-000	MNJCC-01-23	LCD short side	2	Black EVA	
14	M105-106-000	MNJCC-01-04	LCD bracket	1	Electrolytic sheet	
15	M105-107-000	MNJCC-01-19	Coin door	1	Q235	
16	M105-402-000		Lock	2	171	
17	M105-108-000	MNJCC-01-24	Lock stator	1	Electrolytic sheet	
18	M105-109-000	MNJCC-01-17	Seat handle	1	Stainless steel pipe	
19	M105-608-000	MNXFC-01-03	Seat FRP	1	FRP	
20	M105-110-000	MNJCC-01-18	Seat hinge	1	Q235	
21	M105-609-000	MNJCC-01-15	Taillight plastic	1	PMMA（Organic film）	
22	M105-610-000	MNJCC-01-12	Left headlight plastic	1	PMMA（Organic film）	
23	M105-611-000	MNJCC-01-13	Right headlight plastic	1	PMMA（Organic film）	
24	M105-111-000	MNJCC-01-10	Footplate	2	Aluminum board	

9.1 Base：

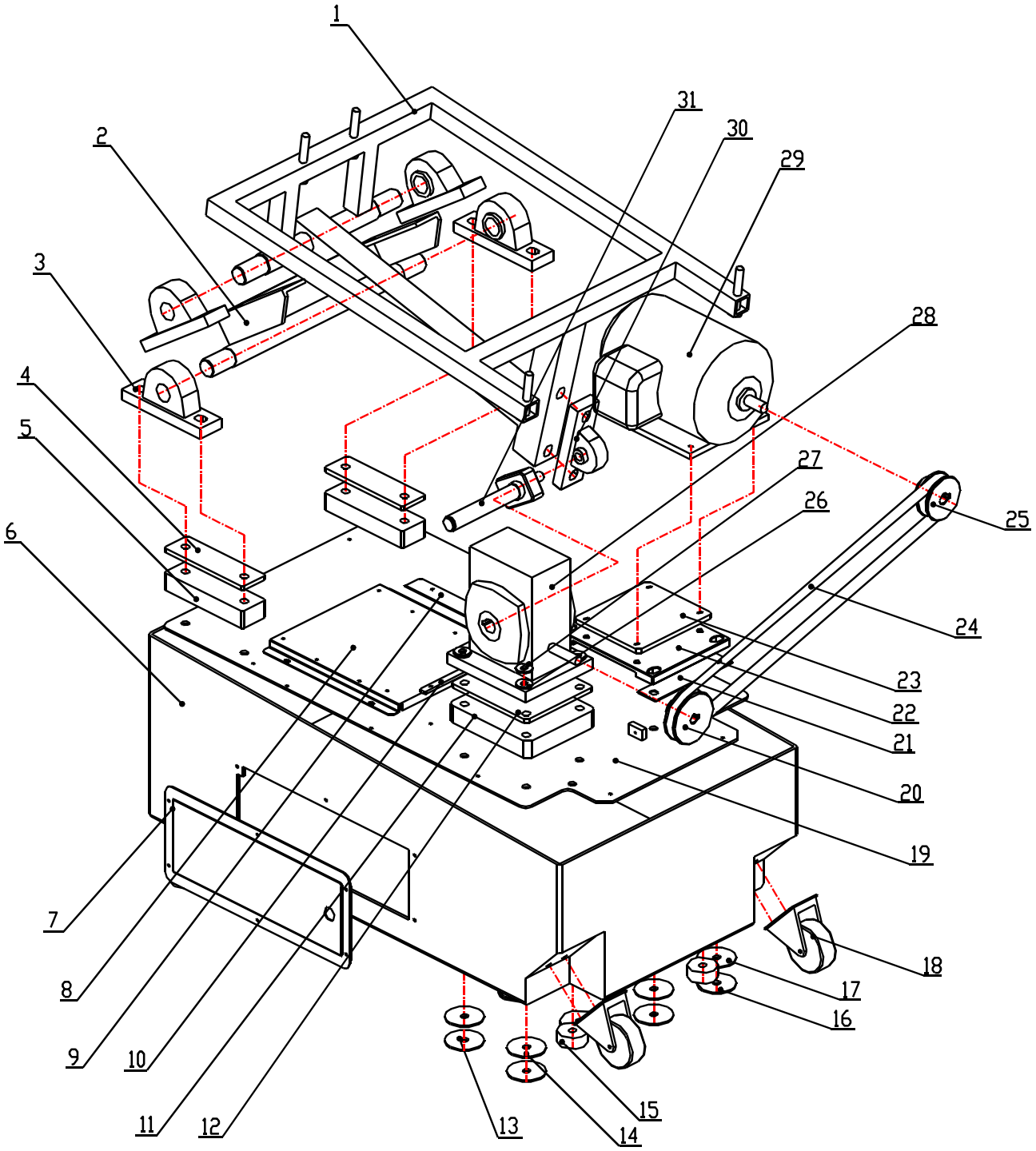

No.	Part No.	Drawing No.	Name	Qty	Spec.	Note
1	M105-112-000	MNJCC-02-03	Bracket 1	1	Electrolytic sheet	
2	M105-113-000	MNJCC-02-11	Bracket 2	1	Q235	
3	M105-403-000		Spherical surface bearing	4	UCP205	

4	M105-612-000	MNJCC-02-13	Bearing holder damping board	2	Latex	
5	M105-613-000	MNJCC-02-12	Bearing holder mat	2	Bakelite	
6	M105-614-000	MNJCC-02-01	Base	1	FRP	
7	M105-114-000	MNJCC-02-02	Service door	1	Q235	
8	M105-115-000	MNJCC-02-04	Electricty fixation board	1	Electrolytic sheet	
9	M105-116-000	MNJCC-02-07	Block board	1	Q235	
10	M105-117-000	MNJCC-02-23	Orientation board	1	Q235	
11	M105-615-000	MNJCC-02-16	Gearbox mat	1	Bakelite	
12	M105-616-000	MNJCC-02-15	Gearbox damping board	1	Latex	
13	M105-118-000	MNJCC-02-18	Flat washer Iron board	10	Q235	
14	M105-617-000	MNJCC-02-17	A&C Flat washer	8	PU adhesive	
15	M105-618-000	MNJCC-02-10	Foot pad	4	Nylon	
16	M105-404-000		Gasket	8	6X1.6h	
17	M105-619-000	MNJCC-02-19	Motor mat	8	PU adhesive	
18	M105-405-000		Castor	2	2.5 inch	
19	M105-119-000	MNJCC-02-22	Motherboard	1	Q235	
20	M105-120-000	MNJCC-02-09	Driven round	1		
21	M105-620-000	MNJCC-02-21	Separate board	2	PU adhesive	
22	M105-121-000	MNJCC-02-06	Motor board	1	Q235	
23	M105-621-000	MNJCC-02-20	Motor damping board	1	Latex	
24	M105-406-000		V type belt	1	A type L=600	
25	M105-122-000	MNJCC-02-08	Active round	1		
26	M105-622-000	MNJCC-02-14	Mat	8	PU adhesive	
27	M105-407-000		C Gasket	16	10X3h	
28	M105-408-000		Gearbox	1	WPWAK 50 type 30:1(A)	
29	M105-409-000		Motor	1	YC7134	
30	M105-410-000		Spherical surface bearing	1	UP201	
31	M105-123-000	MNJCC-02-15	Crankshaft	1	45#	

9.2 Console Assy.：

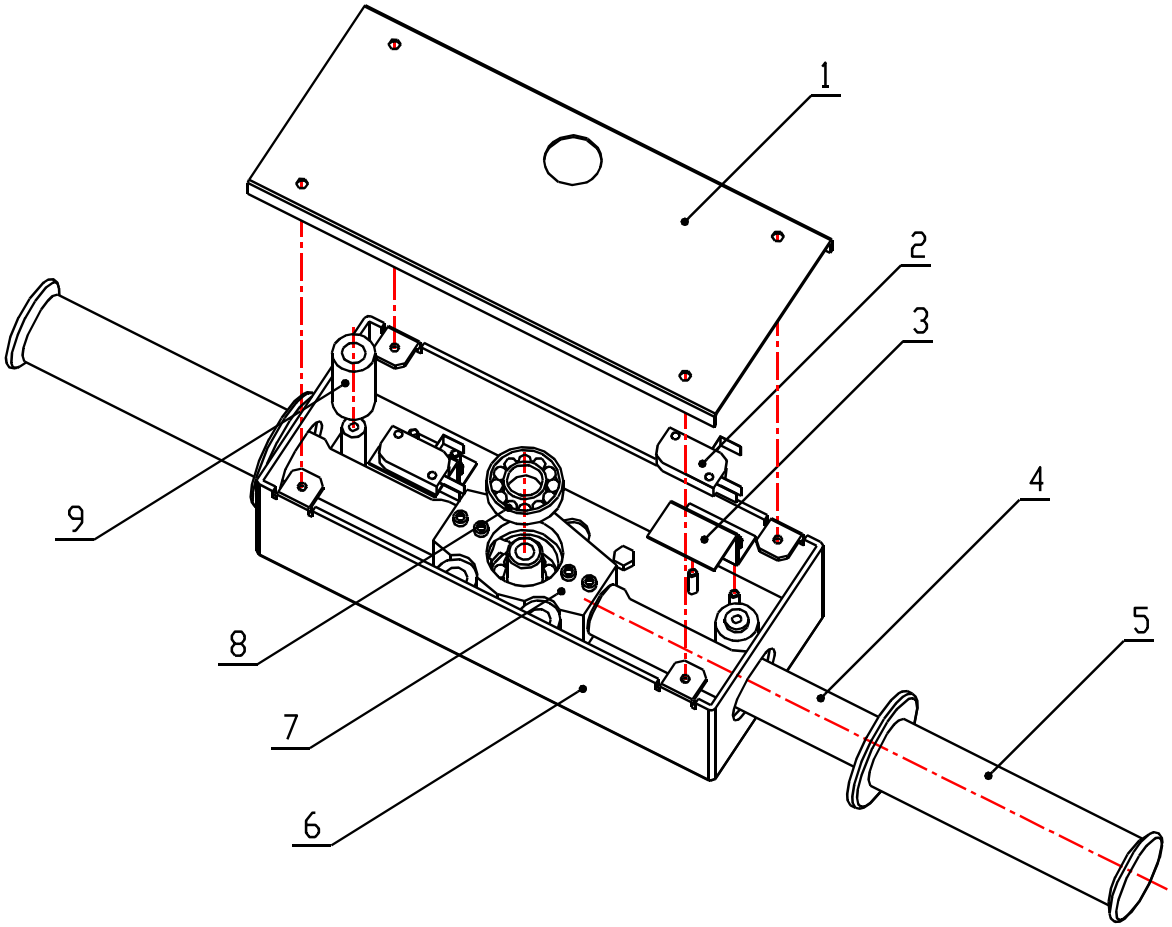

No.	Part No.	Drawing No.	Name	Qyt	Spec.	Note
1	M105-124-000	MNJCC-03-06	Steering wheel	1	Q235	
2	M105-411-000		Micro SW	2		
3	M105-125-000	MLJCC-03-03	Micro SW holder	2	Electrolytic sheet	
4	M105-126-000	MNJCC-03-02	Handle axes	2	Q235	
5	M105-623-000		Handle	2	Latex	
6	M105-127-000	MNJCC-03-05	Outline border	1	Q235	
7	M105-128-000	MNJCC-03-04	Bearing seat	1	Q235	
8	M105-412-000		Ball bearing	2	6002 D=32 d=15 B=9	
9	M105-624-000	MNJCC-03-01	Cushion	4	PU adhesive	

9.7 Electricity part：

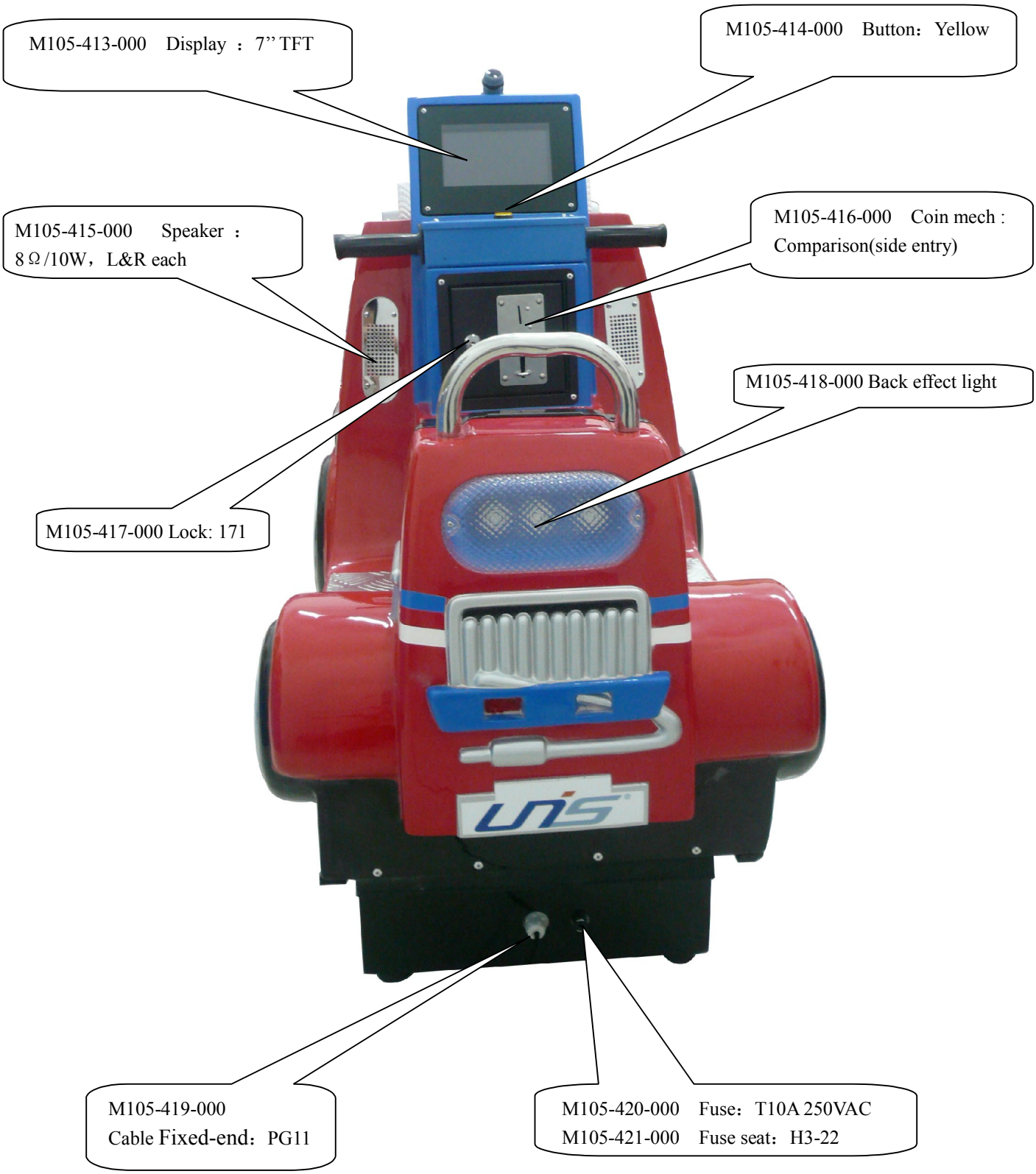

M105-422-000 Alarm light
FIRE TRUCK
FIRE DEPOT
M105-424-000 Front light(Red)
M105-423-000 Front light(Blue)

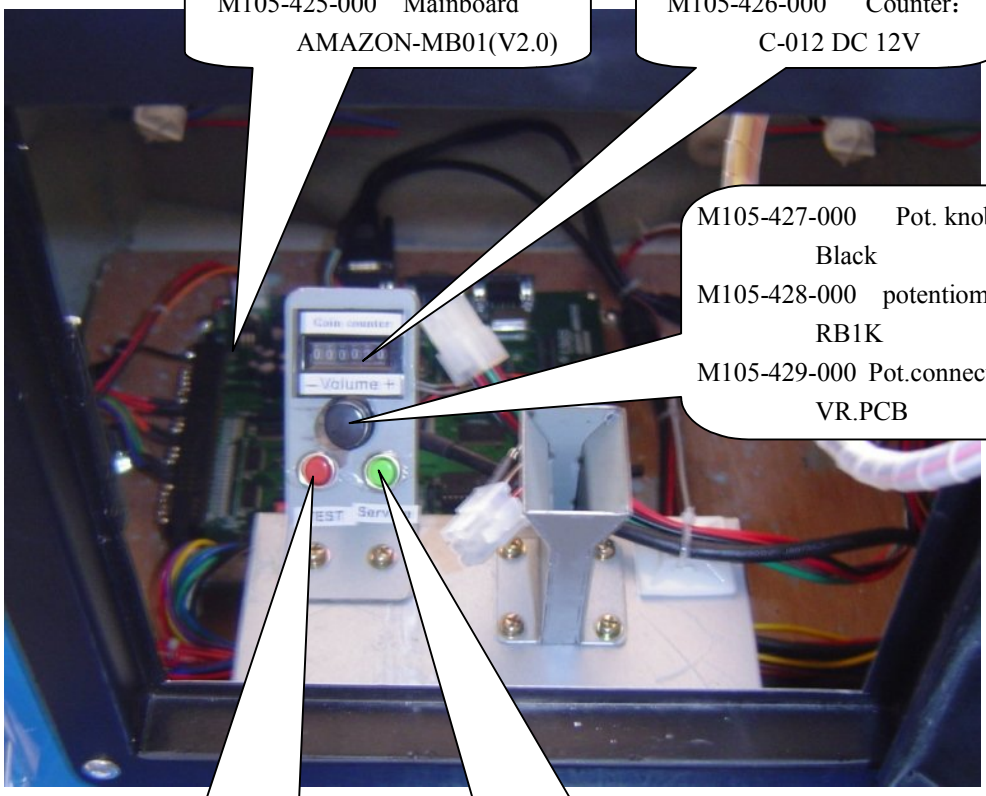

M105-425-000 Mainboard AMAZON-MB01(V2.0)

M105-426-000 Counter: C-012 DC 12V

M105-427-000 Pot. knob : Black

M105-428-000 potentiometer: RB1K

M105-429-000 Pot.connect board: VR.PCB

M105-430-000 Red test button: DS-316

M105-431-000 Green test button : DS-316

M105-432-000 Power supply: EPT-S150D12+5R

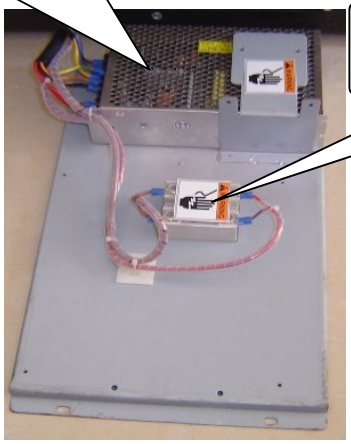

M105-433-000 Solid Relay: SSR-25DA

www.zs-shiyu.com

www.universal-space.com

Tel : (86-760)23886688

Fax: (86-760) 23886689